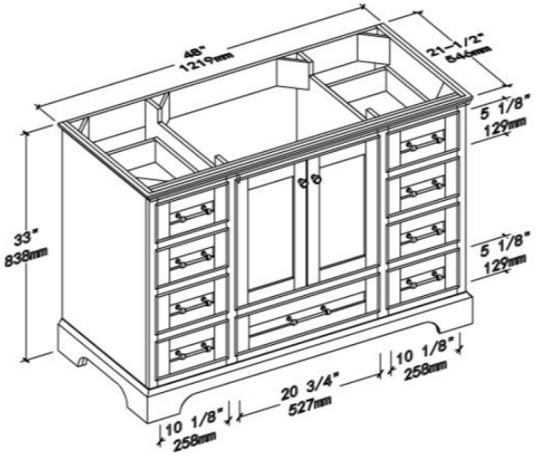

front view

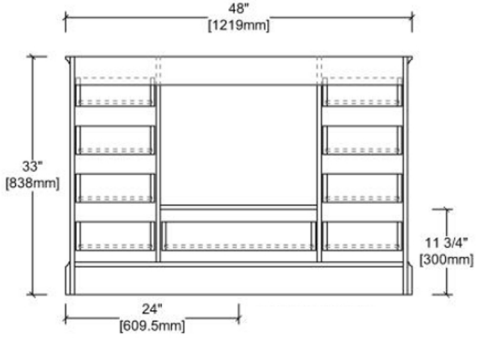

back view

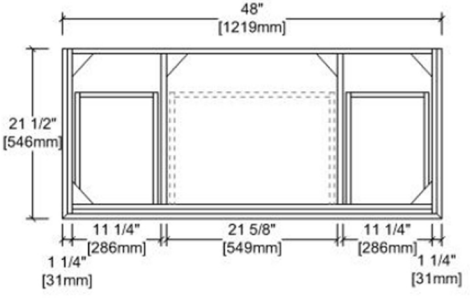

top view