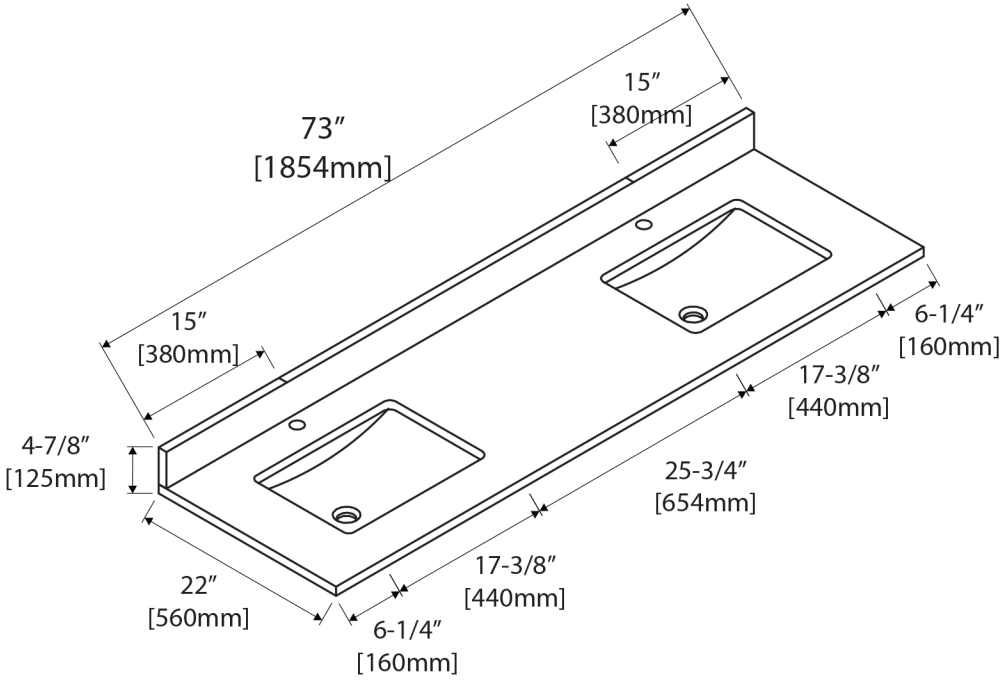
73″
[1854mm]
15″
[380mm]
15″
[380mm]
6-1/4″
[160mm]
17-3/8″
[440mm]
4-7/8″
[125mm]
25-3/4″
[654mm]
22″
[560mm]
17-3/8″
[440mm]
6-1/4″
[160mm]